Problem 41. In the space below, create three views of the adjustable stop. AB = 10.00″, BC = 1.38″, CD = .75″, DE = 1.88″, EF = 2.00″, FG = 2.50″, GH = 2.50″, FH = 5.00″, HJ = 2.50″, JK = 5.00″, L = Ø1.00″, 2 holes, M = R.50″, N = R1.25″, AO = 2.00″, P = 1.25″, Q = 1.25″, slot = 1.50″ wide. Scale: As assigned.

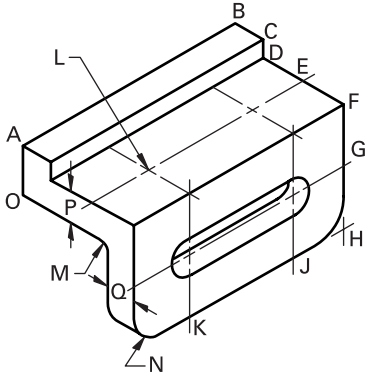

ADJUSTABLE STOP