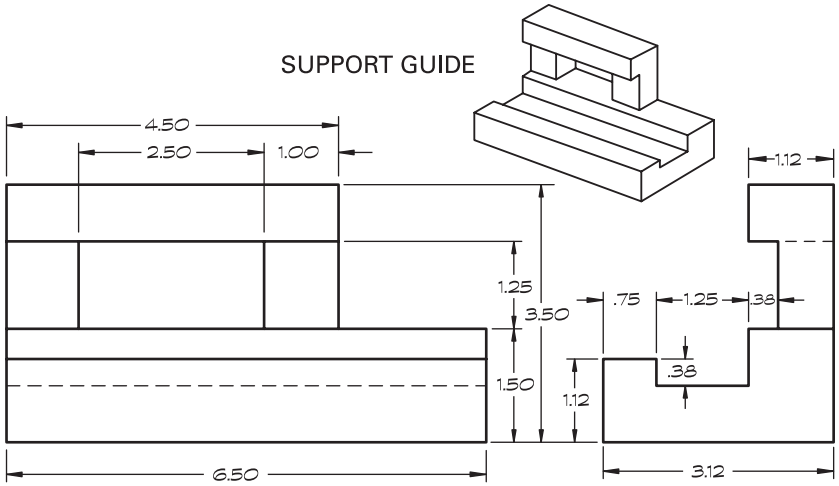Problem 50. In the space below, draw three views of the support guide. Scale: Half size.