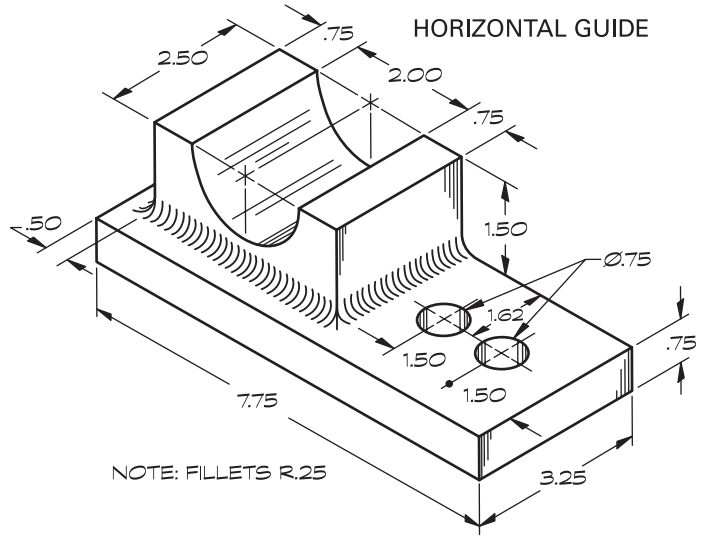Problem 56. Draw three views of the horizontal guide. Scale: Half size.