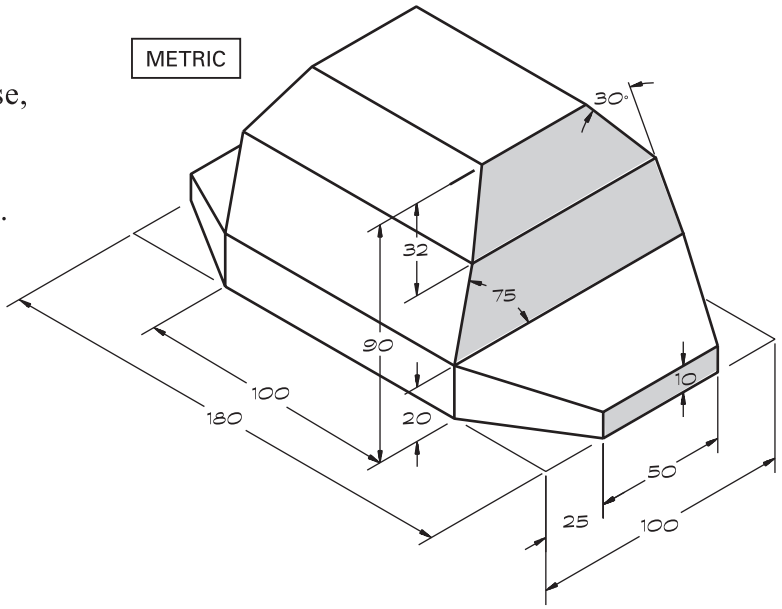Problem 70. Make a three-view drawing of the base, complete with dimensions. Show the dimensions with the view that best shows the shape of the part or feature. Scale: 1:2. Allow sufficient space between views for dimensions.